Note

1. Cable: 4/2 Wire, AWG#24, Unshielded, & Untwisted Cable.
2. The cable is designed for the connector mounted on VFD glass side with its lock latch faced upper or adjacent to the edge of glass.

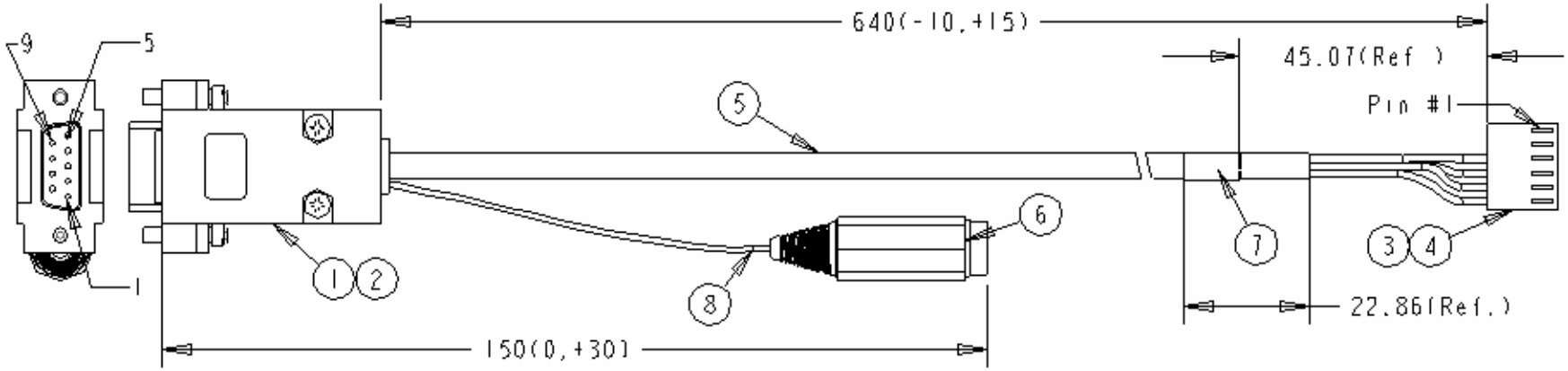

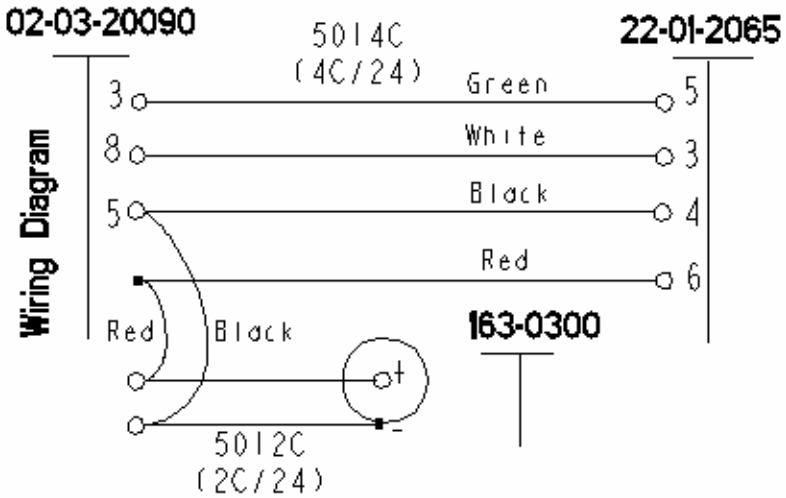

Rev	Date	Description	Req	Appd
Rel.	11/4/02	Created new NTC P/N.	MN	GC

3rd Angle Projection

Unless otherwise noted: All linear tolerances are -1, +2%.

UNIT MM

Data Cable with Power Line for GU 7000

DRN SX | Date 11/4/02 | P/N NTC-04-0004

CHK'D | Date | Project | Filename NTC-04-0004

APP'D | Date | DRN No. | SHT 1 OF 1

Noritake Technology Center
2365 Clearbrook Drive
Arlington Heights, IL 60005
PH (847)364-4724 FX(847)364-4815
Email: NTC.ELE@noritake.com